Model **Ser.61 (VG)**

RUBBER SLEEVE KNIFE GATE VALVE

The Series 61 (VG) model knife gate is a bi-directional wafer valve equipped with two metal reinforced rubber sleeves, designed for applications with abrasive slurries. The Series 61 (VG) slurry knife gate valve is mainly used in industries such as:

- Mining
- Chemical plants
- Power plants
- Wastewater treatment plants
- Etc.

Sizes (DN)

2in/50mm to 36in/900mm
Larger diameters on request

Working pressure and temperatures

DN 2in/ 50mm to 16in/400mm : 150 psi/10 bar
DN 18in/450mm to 24in/600mm: 90 psi/6 bar or 150 psi/10 bar [1]
DN 28in/700mm to 36in/900mm: 75 psi/5 bar or 150 psi/10 bar [1]
Higher pressures and/or diameters on request
[1] Duplex gate for 150 psi/10 bar

GJS 400: 14°F (-10°C) / 176°F (80°C)
CF8M: -4°F (-20°C) / 176°F (80°)

Standard flange drilling

ASME B16.5 (class 150)
EN 1092 PN10
Other flange drillings available on request

Directives

For EU Directives and other Certificates please see the document: Directives & Certificates Compliance - Knife Gate Valves –Catalogues and Datasheets

Testing

All valves are tested prior to shipping in accordance with the standard EN-12266-1

STANDARD PARTS LIST

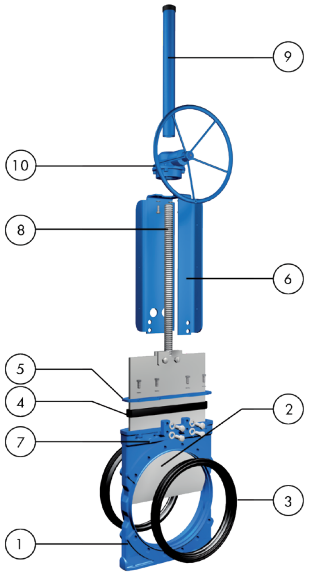

Part		Materials
1	Body	Ductile iron A536 (60-40-18) / 0.7040 / EN-GJS400
2	Gate	AISI 304 / AISI 316
3	Sleeves	Natural rubber / EPDM
4	Packing	EPDM
5	Gland follower	A570 GR.40 / 1.0044 Epoxy coated
6	Yoke	A570 GR.40 / 1.0044 Epoxy coated
7	Grease nipple	Zinc coated carbon-steel
8	Stem	Stainless Steel
9	Stem protector	A570 GR.40 / 1.0044 Epoxy coated
10	Bevel gear	-

DESIGN FEATURES

Body
Wafer style cast monoblock, for installation between flanges, with reinforced ribs in larger diameters, providing the body with extra strength. Internal body design allows the gate to be fully guided. It is equipped with two machined lateral mouths where the sleeves fit perfectly. The grease nipples allow the gate to be lubricated, thus enhancing its capacity to slide between the sleeves. Additionally, the design allows draining through the lower part, where a cover or a bottom splash guard can be installed. Some leakage will occur from the bottom of the valve during operation. This allows solids to be flushed from body cavity and will ensure the full stroke of the valve

Gate
Made of stainless steel, polished on both sides, and of rectangular shape, the gate is machined to an edge. As well as reducing friction and damage to the seats, this design allows to cut perfectly through the fluid. The material can be changed upon request, thus allowing greater working pressures

Rubber sleeves
The seat is made up of two highly resistant, long-lasting sleeves, made of natural rubber with a metal core. The patented sleeve design allows for maximum flexibility during gate travel, minimising the effort necessary for its operation. In the open position, the two sleeves are in permanent contact with each other, assuring full bore flow. There are no seat cavities which may cause material build-up, and the fluid does not come into contact with the metallic parts of the valve. This design allows for easy replacement of damaged sleeves

Packing
Made of EPDM, it eliminates possible leaks to the exterior as well as minimising the maintenance needs of traditional packings. In combination with the grease nipples, it guarantees an optimal functioning of the gate

Stem
Made of stainless steel, which provides it with a high resistance to corrosion and a long life. In rising stem valves the stem protector also protects the spindle against dirt

Yoke or actuator support
Made of steel (stainless steel available on request) and Epoxy coated. Its robust design provides it with great rigidity, withstanding the most adverse operating conditions. Reinforced design is standard starting from DN 8in/200mm

Epoxy coating
The Epoxy coating on all ORBINOX cast iron and carbon steel components is electrostatically applied making the valves to be corrosion resistant with a high quality finished surface. The ORBINOX standard colour is RAL-5015 blue

Gate safety protection
ORBINOX automated valves are provided with gate guards in accordance with EU Safety Standards. The design feature prevents any objects from being caught accidentally while the gate is movingg.* IN EUROPE ONLY

Actuators
ORBINOX offers a complete range of actuator solutions, including manual, pneumatic, electric and hydraulic actuators

Manual RS Manual NRS Bevel Gear Chainwheel

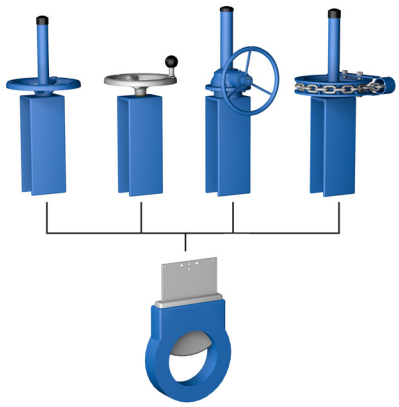

Pneumatic Double Acting Pneumatic Single Acting Hydraulic Electric RS Electric NRS

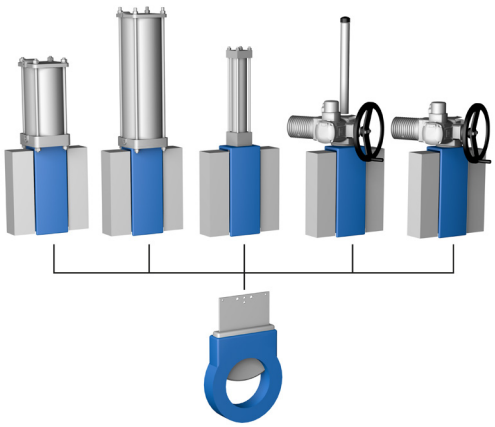

OTHER OPTIONS

Bottom splash guard (Fig. 1 and 2)

There are two types of splash guards that can be installed on the lower part of the valve body. They permit either periodic or continuous removal of solids that may accumulate during operation of the valve. They shall always be connected to a drain line.

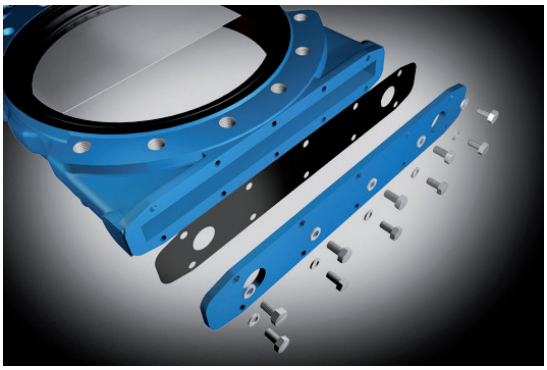

(Fig. 1) Flat plate

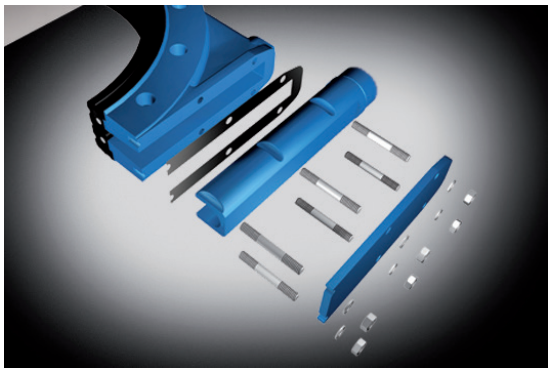

(Fig. 2) Tubular design

Conventional leak proof packing (Fig. 3 and 4)

The Series 61 (VG) can use conventional leak proof packing and packing gland follower which guarantee full tightness at maximum design pressure

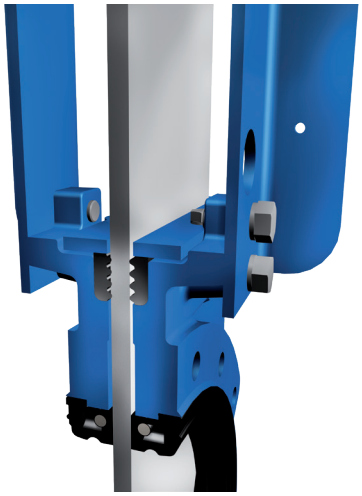

(Fig. 3) Standard packing

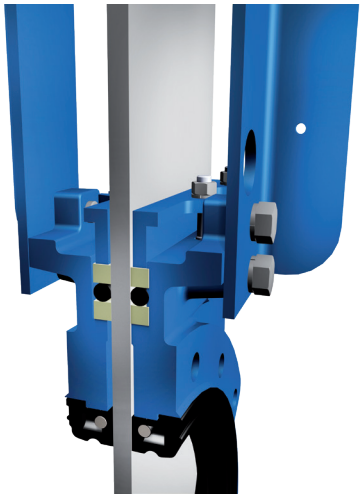

(Fig. 4) Optional: conventional leak proof packing

Other materials of construction

Other materials may be used, such as carbon steel, different stainless steels (AISI 316, AISI 317, 2205, ...), special alloys (254SMO, Hastelloys, ...), etc.

Fabricated valves

ORBINOX designs, produces and delivers special fabricated valves for special process conditions (big sizes and/or high pressures)

Surface treatments

Valve components can be protected or coated for a longer life expectancy, depending on the application of the valves and the valve service conditions. At ORBINOX we can offer alternative treatments and coatings for the different valve components to improve their properties against abrasion (Stellite, Polyurethane...), against corrosion (Halar, Rilsan, Galvanised...) and against adherence (Polishing, PTFE...)

OTHER OPTIONS

Open-closed lockout system (Fig. 5)
The standard valve is ready to install a lockout pin for emergency or maintenance situations

Flush ports (Fig. 6)
Allows flushing out of solids trapped within the body cavity and the sleeves. This option can be used in conjunction with splash guards

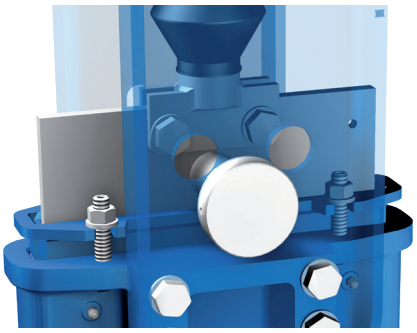

Fig. 5

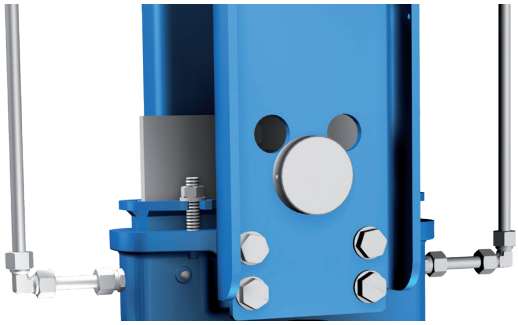

Fig. 6

Actuator manual override (Fig. 7)
Pneumatic and electric actuators can be equipped with manual overraide handwheels to manually operate the actuators in emergency situations on maintenance operations

Stem extensions and floor stand (Fig. 8)
Extensions for valve operation when valves are installed in positions below operation level are available, including wall brackets and different types of pedestals for actuators

Fig. 7

Fig. 8

Accessories for pneumatic valve automation
Limit and proximity switches, solenoid valves, positioners, flow regulations, air filter units, silencers, junction boxes

SEAT/SEAL TYPES

Material	Max. T. (°F)	Max. T. (°C)	Applications
Natural rubber	167	75	General
EPDM (E)	248	120	Acids and non mineral oils
Neoprene	194	90	Oils/Solvents
Chlorobutyl	257	125	High temperatures
NBR (N)	248	120	Hydrocarbons/Oils/Greases

All of them are reinforced with a metal core. For other temperatures and applications, contact our technical department.

Operating conditions at very low temperatures may differ from the absolute minimum temperature conditions supported by these rubber grades. Please contact our technical department for more information

PACKING TYPES

Material	Max. T. (°F)	Max. T. (°C)
EPDM (E)	248	120
PTFE impregn. synth. fiber (ST)	482	250

SEAT CONFIGURATIONS/DESIGNS

Type	Features
Rubber sleeves	The closure of the Series 61 (VG) valve is achieved by its two characteristic high resistance elastomer sleeves, which improve the tight seal both in the adjustment with the flanges and in the closure. These sleeves have a metal core which provides them with a great resistance to demanding working conditions and pressures

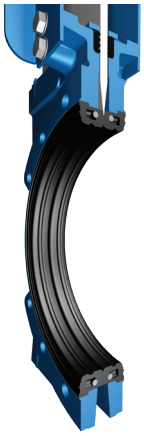

OPEN

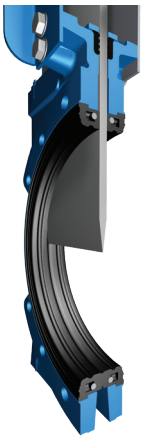

INTERMEDIATE

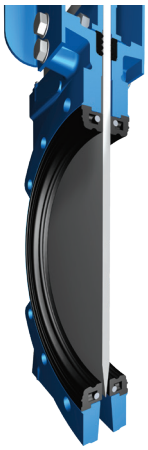

CLOSED

HANDWHEEL RISING STEM

Standard manual actuator available from 2in/50mm to 8in/200mm (larger diameters on request) and recommended with gearbox from DN 8in/200mm and above

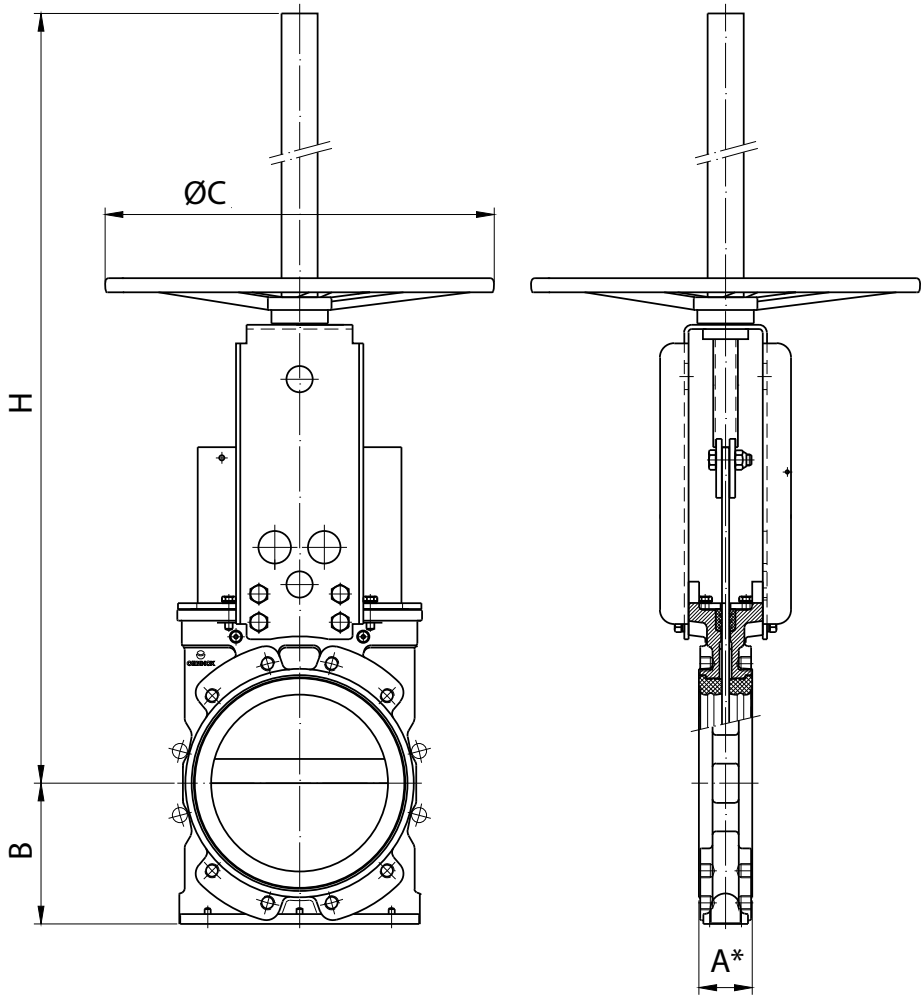

DN (in/mm)	A1* (in/mm)	A2* (in/mm)	B (in/mm)	ØC (in/mm)	H (in/mm)	Weight (lbs./kg.)
2/50	2.12/54	2.36/60	2.48/63	8.86/225	17.52/445	20/9
2 ½/65	2.12/54	2.36/60	2.75/70	8.86/225	18.50/470	23/10
3/80	2.24/57	2.48/63	3.54/90	8.86/225	19.49/495	27/12
4/100	2.24/57	2.48/63	4.00/100	12.20/310	54.39/645	38/17
5/125	2.50/63,5	2.71/69	4.80/122	12.20/310	28.00/700	45/20
6/150	2.50/63,5	2.71/69	5.07/129	12.20/310	29.33/745	51/23
8/200	3.00/76	3.26/83	6.46/164	16.14/410	37.20/945	89/40

A1*: installed face to face A2*: minimum required dimension for installation

GEAR RISING STEM

Manual actuator recommended for valves larger than 8in/200mm

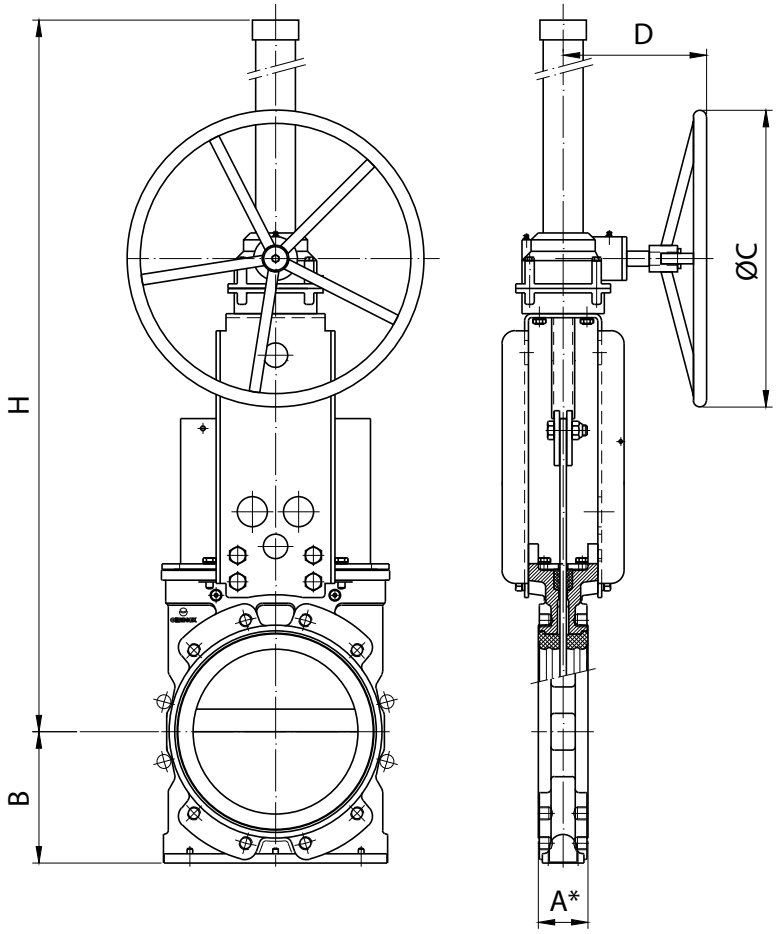

DN (in/mm)	A1* (in/mm)	A2* (in/mm)	B (in/mm)	ØC (in/mm)	H (in/mm)	D (in/mm)	Weight (lbs./kg.)
8/200	3.00/76	3.26/83	6.46/164	12.00/300	40.94/1040	8.00/200	120/54
10/250	3.00/76	3.26/83	7.83/199	12.00/300	41.73/1060	8.00/200	159/72
12/300	3.24/82,5	3.54/90	9.09/231	12.00/300	57.48/1460	8.00/200	203/92
14/350	3.24/82,5	3.54/90	10.12/257	18.00/450	60.23/1530	8.66/220	272/123
16/400	3.74/95,5	4.02/102	11.45/291	18.00/450	64.57/1640	8.66/220	344/156
18/450	3.74/95,5	4.06/103	12.48/317	18.00/450	68.90/1750	8.66/220	441/200
20/500	4.76/121	5.08/129	13.58/345	25.60/650	75.98/1930	11.33/288	574/260
24/600	4.76/121	5.08/129	16.26/413	25.60/650	84.65/2150	11.33/288	759/344
28/700	7.12/181	7.48/190	18.70/475	25.60/650	102.95/2615	11.33/288	-
30/750	7.36/187	7.67/195	20.00/500	25.60/650	179.48/2730	11.33/288	-
32/800	8.11/206	8.42/214	21.65/550	25.60/650	113.38/2880	11.33/288	-
36/900	8.87/225,5	9.21/234	24.40/620	25.60/650	118.50/3010	11.33/288	-

A1*: installed face to face A2*: minimum required dimension for installation

PNEUMATIC CYLINDER

With a double-acting pneumatic cylinder as standard, it is available in sizes from 2in/50mm to 24in/600mm. Single-acting pneumatic cylinders, manual overrides, fail-safe systems as well as a wide variety of pneumatic accessories for valve automation available Actuator sized for 85psi/(6 bar) air supply, see ORBINOX Pneumatic Cylinder Catalogue for more information.

For valves installed in a horizontal position, actuator supports to plant structure is recommended

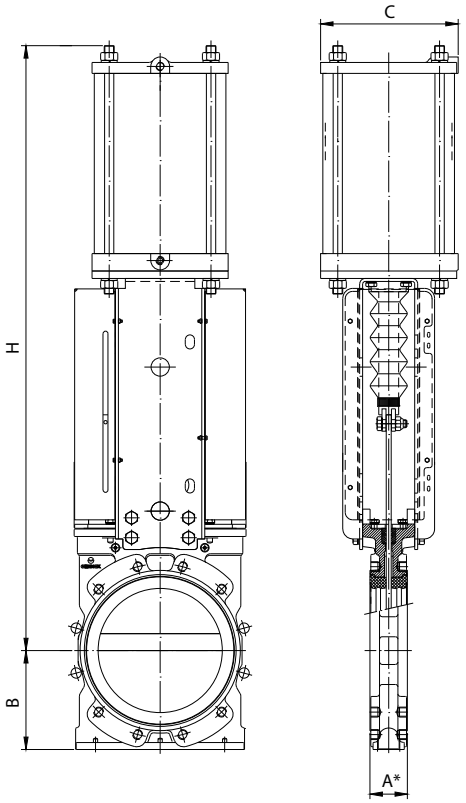

DN (in/mm)	A1* (in/mm)	A2* (in/mm)	B (in/mm)	C (in/mm)	H (in/mm)	Connect.	Weight (lbs./kg.)
2/50	2.12/54	2.36/60	2.48/63	4.58/115	20.31/516	1/4" G	23/10
2 ½/65	2.12/54	2.36/60	2.75/70	4.58/115	21.65/550	1/4" G	25/11
3/80	2.24/57	2.48/63	3.50/90	5.51/140	24.45/621	1/4" G	38/17
4/100	2.24/57	2.48/63	4.00/100	5.51/140	27.08/688	1/4" G	42/19
5/125	2.50/63.5	2.71/69	4.80/122	6.89/175	32.16/817	1/4" G	64/29
6/150	2.50/63.5	2.71/69	5.08/129	6.89/175	35.15/893	1/4" G	71/32
8/200	2.99/76	3.26/83	6.46/164	8.66/220	42.01/1067	3/8" G	117/53
10/250	2.99/76	3.26/83	7.83/199	10.90/277	48.03/1220	3/8" G	197/89
12/300	3.24/82.5	3.54/90	9.10/231	13.18/335	58.03/1474	1/2" G	318/144
14/350	3.24/82.5	3.54/90	10.12/257	17.48/444	66.42/1687	3/4" G	404/183
16/400	3.74/95	4.02/102	11.46/291	17.48/444	71.81/1824	3/4" G	477/216
18/450	3.75/95.5	4.06/103	12.48/317	20.27/515	79.72/2025	3/4" G	642/291
20/500	4.76/121	5.08/129	13.58/345	20.27/515	86.53/2198	3/4" G	752/341
24/600	4.76/121	5.08/129	16.26/413	20.27/515	95.27/2420	3/4" G	946/429

A1*: installed face to face A2*: minimum required dimension for installation

HYDRAULIC ACTUATOR

Standard hydraulic actuator consists of a double acting cylinder in accordance with ISO 6020/2 , available from 2in/50mm to 36in/900mm with PVC bellows. Open-closed lockout, pressure indicators (mechanical and inductive), position transducers, hydraulic groups and electrical cabinets are optional.

Hydraulic pressure: 1450psi/100 bar and maximum hydraulic pressure: 2320psi/160 bar

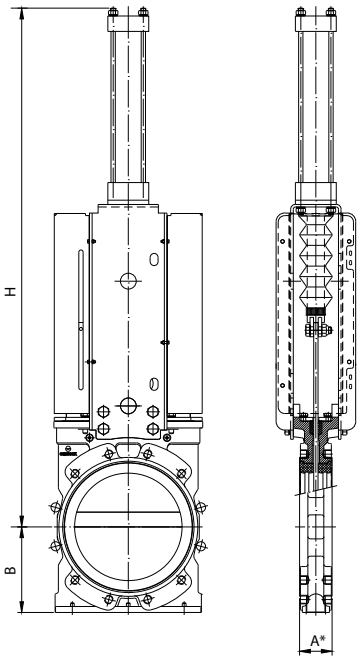

DN (in/mm)	A1* (in/mm)	A2* (in/mm)	B (in/mm)	H (in/mm)	Connect.
2/50	2.12/54	2.36/60	2.48/63	21.22/539	1/4" G
2 ½/65	2.12/54	2.36/60	2.75/70	22.60/574	1/4" G
3/80	2.24/57	2.48/63	3.50/90	24.96/634	1/4" G
4/100	2.24/57	2.48/63	4.00/100	26.88/683	1/4" G
5/125	2.50/63.5	2.71/69	4.80/122	32.36/822	1/4" G
6/150	2.50/63.5	2.71/69	5.08/129	36.42/925	3/8" G
8/200	2.99/76	3.26/83	6.46/164	42.59/1082	1/2" G
10/250	2.99/76	3.26/83	7.83/199	47.95/1218	1/2" G
12/300	3.24/82.5	3.54/90	9.10/231	58.26/1480	3/4" G
14/350	3.24/82.5	3.54/90	10.12/257	64.21/1631	3/4" G
16/400	3.74/95	4.02/102	11.46/291	69.60/1768	3/4" G
18/450	3.75/95.5	4.06/103	12.48/317	77.48/1968	3/4" G
20/500	4.76/121	5.08/129	13.58/345	83.85/2130	3/4" G
24/600	4.76/121	5.08/129	16.26/413	92.59/2352	1" G
28/700	7.12/181	7.48/190	18.70/475	104.37/2651	3/4" G
30/750	7.36/187	7.67/195	20.00/500	109.49/2781	3/4" G
32/800	8.11/206	8.42/214	21.65/550	116.93/2970	1" G
36/900	8.87/225.5	9.21/234	24.41/620	127.16/3230	1" G

A1*: installed face to face A2*: minimum required dimension for installation

ELECTRIC ACTUATOR

Designed with a yoke flange for the actuator according to ISO 5210 / DIN 3338 as standard, it is available from 2in/50mm to 36in/900mm, both for rising stem and non-rising stem configurations and with manual overrides.

Knife gate valves with a wide range of electric actuator brands available

For valves installed in a horizontal position, actuator supports to plant structure is recommended

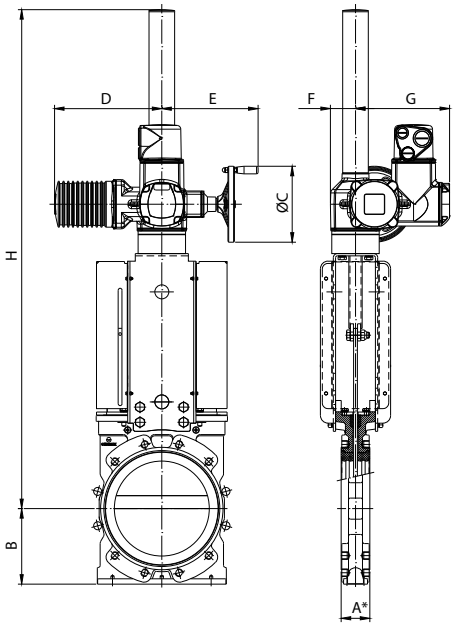

DN (in/mm)	A1* (in/mm)	A2* (in/mm)	B (in/mm)	ØC (in/mm)	H (in/mm)	D (in/mm)	E (in/mm)	F (in/mm)	G (in/mm)	Weight (lbs./kg.)
2/50	2.12/54	2.36/60	2.48/63	6.30/160	23.74/603	10.43/265	9.80/249	2.44/62	9.37/238	144/65
2 ½/65	2.12/54	2.36/60	2.75/70	6.30/160	24.72/628	10.43/265	9.80/249	2.44/62	9.37/238	146/66
3/80	2.24/57	2.48/63	3.54/90	6.30/160	26.06/662	10.43/265	9.80/249	2.44/62	9.37/238	150/68
4/100	2.24/57	2.48/63	3.93/100	6.30/160	27.08/688	10.43/265	9.80/249	2.44/62	9.37/238	156/71
5/125	2.50/63.5	2.71/69	4.80/122	6.30/160	43.31/1100	10.43/265	9.80/249	2.44/62	9.37/238	166/75
6/150	2.50/63.5	2.71/69	5.08/129	6.30/160	45.59/1158	10.43/265	9.80/249	2.44/62	9.37/238	175/79
8/200	2.99/76	3.26/83	6.45/164	7.87/200	50.07/1272	11.14/283	10.00/254	2.55/65	9.76/248	139/63
10/250	2.99/76	3.26/83	7.83/199	7.87/200	54.60/1387	11.14/283	10.00/254	2.55/65	9.76/248	183/83
12/300	3.24/82.5	3.54/90	9.09/231	7.87/200	57.24/1454	11.14/283	10.00/254	2.55/65	9.76/248	228/103
14/350	3.24/82.5	3.54/90	10.12/257	12.40/315	63.07/1602	15.31/389	13.22/336	3.54/90	1.,25/286	344/156
16/400	3.74/95	4.02/102	11.46/291	12.40/315	66.53/1690	15.31/389	13.22/336	3.54/90	11.25/286	415/188
18/450	3.75/95.5	4.06/103	12.48/317	16.00/400	71.78/1822	15.31/389	13.22/336	3.54/90	11.25/286	527/239
20/500	4.76/121	5.08/129	13.58/345	16.00/400	75.78/1925	15.31/389	13.34/339	3.54/90	11.25/286	657/298
24/600	4.76/121	5.08/129	16.26/413	20.00/500	83.46/2120	16.93/430	14.37/365	4.53/115	11.93/303	847/384
28/700	7.12/181	7.48/190	18.70/475	16.00/400	109.05/2770	15.31/389	13.34/339	3.58/91	11.25/286	-
30/750	7.36/187	7.67/195	20.00/500	20.00/500	113.38/2880	16.93/430	14.37/365	4.53/115	11.93/303	-
32/800	8.11/206	8,42/214	21.65/550	20.00/500	119.48/3035	16.93/430	14.37/365	4.53/115	11.93/303	-
36/900	8.87/225.5	9.21/234	24.40/620	20.00/500	125.20/3180	16.93/430	14.37/365	4.53/115	11.93/303	-

A1*: installed face to face A2*: minimum required dimension for installation

FLANGE AND BOLTING DETAILS ASME B16.5, CLASS 150

DN	K	nº	M	T	● ⊕
2″	4 ¾″	4	5/8″ - 11 UNC	3/8″	4 - 0
2 ½″	5 ½″	4	5/8″ - 11 UNC	1/2″	4 - 0
3″	6″	4	5/8″ - 11 UNC	1/2″	4 - 0
4″	7 ½″	8	5/8″ - 11 UNC	1/2″	4 - 4
5″	8 ½″	8	3/4″ - 10 UNC	9/16″	4 - 4
6″	9 ½″	8	3/4″ - 10 UNC	9/16″	4 - 4
8″	11 ¾″	8	3/4″ - 10 UNC	5/8″	4 - 4
10″	14 ¼″	12	7/8″ - 9 UNC	5/8″	8 - 4
12″	17″	12	7/8″ - 9 UNC	3/4″	8 - 4
14″	18 ¾″	12	1″ - 8 UNC	3/4″	8 - 4
16″	21 ¼″	16	1″ - 8 UNC	3/4″	12 - 4
18″	22 ¾″	16	1 1/8″ - 7 UNC	3/4″	12 - 4
20″	25″	20	1 1/8″ - 7 UNC	15/16″	16 - 4
24″	29 ½″	20	1 1/4″ - 7 UNC	15/16″	16 - 4

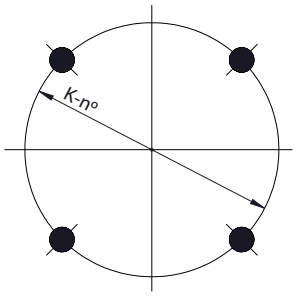

DN 2"- 3"

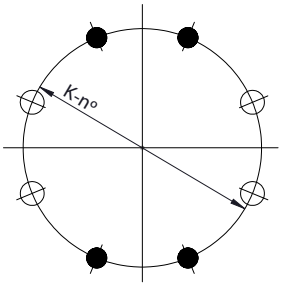

DN 4" - 8"

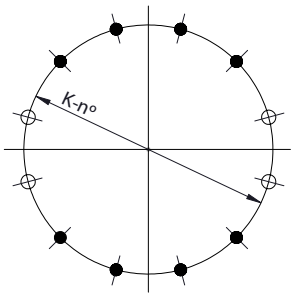

DN 10" - 14"

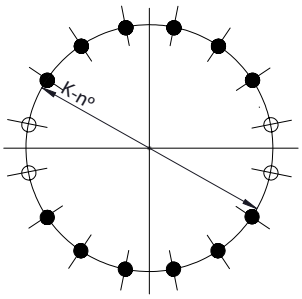

DN 16" - 18"

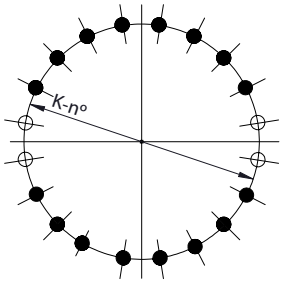

DN 20" - 24"

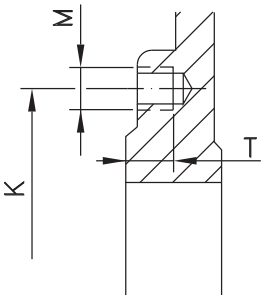

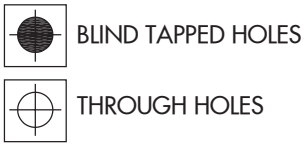

FLANGE AND BOLTING DETAILS EN-1092 PN10

DN	K	nº	M	T	⊕ ⊕
50	125	4	M-16	10	4 - 0
65*	145	4	M-16	12	4 - 0
80	160	8	M-16	12	4 - 4
100	180	8	M-16	12	4 - 4
125	210	8	M-16	14	4 - 4
150	240	8	M-20	14	4 - 4
200	295	8	M-20	16	4 - 4
250	350	12	M-20	16	8 - 4
300	400	12	M-20	20	8 - 4
350	460	16	M-20	20	12 - 4
400	515	16	M-24	20	12 - 4
450	565	20	M-24	20	16 - 4
500	620	20	M-24	25	16 - 4
600	725	20	M-27	24	16 - 4

* Flange drilling of DN 65 PN10/16 according to EN-1092 allow 4 or 8 drills. ORBINOX designs of DN 65 PN10/16 have 4 drills

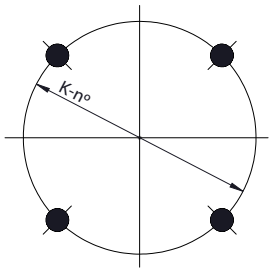

DN 50-65

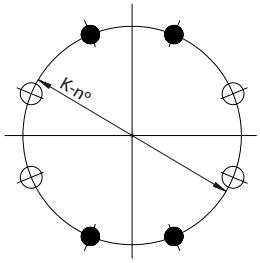

DN 80-200

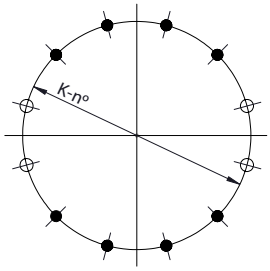

DN 250-300

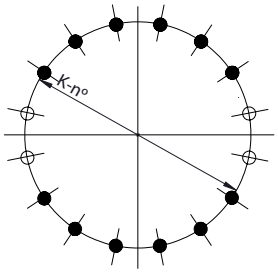

DN 350-400

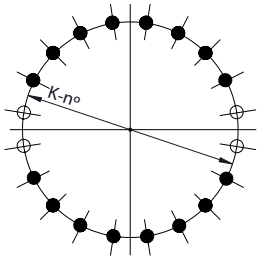

DN 450-600

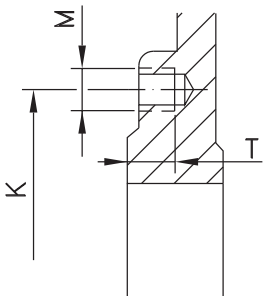

BLIND TAPPED HOLES

THROUGH HOLES